AXOR

AXOR Uno
3-hole basin mixer 200 zero handle with pop-up waste set
Surfaces: **Polished Brass** Article Number: **45133930**

Description

product features

- consists of: 3-hole basin mixer, waste set
- ComfortZone 200
- projection 183 mm
- swivel range 110°
- laminar spray
- flow rate at 3 bar: 5 l/min
- ceramic valves hot/ cold 90°
- suitable for continuous flow water heaters
- pop-up waste set G 1¼
- connection dimension: DN15

Technology

Product image

Scale drawing

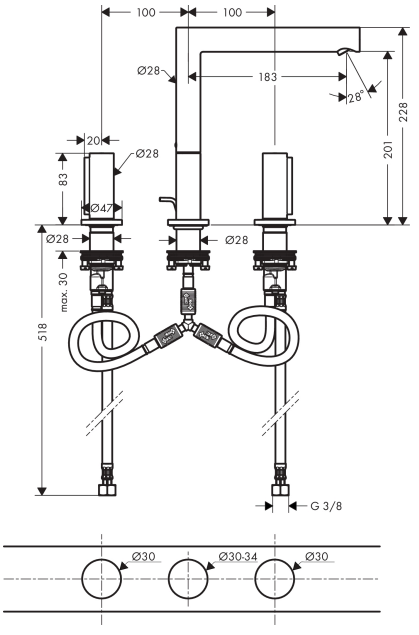

AXOR Uno
3-hole basin mixer 200 zero handle with pop-up waste set
Surfaces: **Polished Brass** Article Number: **45133930**

Flowchart

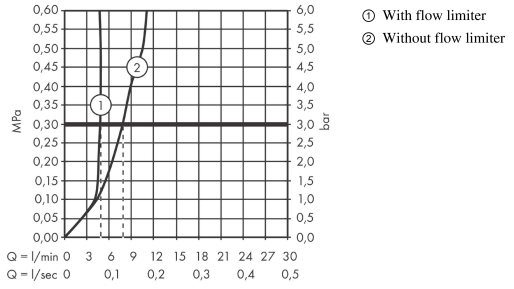

AXOR

AXOR Uno
3-hole basin mixer 200 zero handle with pop-up waste set
Surfaces: **Polished Brass** Article Number: **45133930**

Exploded Drawing

Year of production: **>04/17**

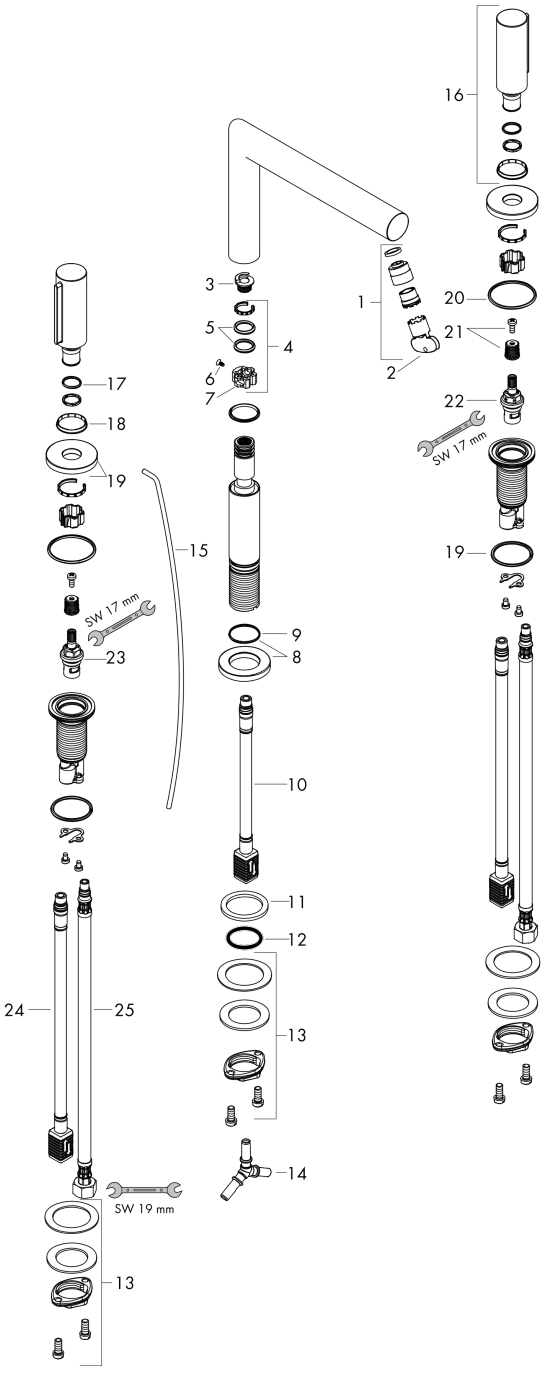

AXOR

AXOR Uno
3-hole basin mixer 200 zero handle with pop-up waste set
Surfaces: **Polished Brass** Article Number: **45133930**

Spare part list

Year of production: **>04/17**

Pos.	Description	Article Number	PC	PU
1	aerator laminar M18x1 (5 l/min)	92896930	0	1
2	special tool	98987000	0	1
3	set of locating rings (110° / 150°)	98486000	0	1
4	sealing set	92646000	0	1
5	O-Ring 14x2,5	98189000	0	1
6	screw	97662000	0	1
7	axialring	97558000	0	1
8	O-ring 25x1,5	98146000	0	1
9	escutcheon for spout	92957930	0	1
10	connection hose 200 mm M10x1	92913000	0	1
11	flat seal	98749000	0	1
12	O-ring 26x4	92191000	0	1
13	fixing set (Ø 28)	92909000	0	1
14	hose connection angel	92905000	0	1
15	pull rod	97158930	0	1
16	handle	92959930	0	1
17	O-Ring 14x1,5	98201000	0	1
18	set of color-rings cold / hot water	96319000	0	1
19	escutcheon for handle	92956930	0	1
20	O-ring 33x2,5	92907000	0	1
21	handle fixing set	98932000	0	1
22	shut off unit left closing	95366000	0	1
23	shut off unit right closing	98817000	0	1
24	connection hose 450 mm M8x0,75 G3/8	97206000	0	1
25	connection hose 400 mm M10x1	92914000	0	1
a	pop up waste	94139930	0	1