AXOR

AXOR Edge
3-hole basin mixer 130 with push-open waste set
Surfaces: **Chrome** Article Number: **46050000**

Description

product features

- consists of: 3-hole basin mixer, waste set
- ComfortZone 130
- projection 173 mm
- normal spray
- flow rate at 3 bar: 4.6 l/min
- suitable for continuous flow water heaters
- push-open waste set (operation via pressure plug, for basins with overflow)
- material waste set: metal
- scope of supply: 3-hole basin mixer, connection hoses, fixing set, special tool, assembly instruction

Technology

Product image
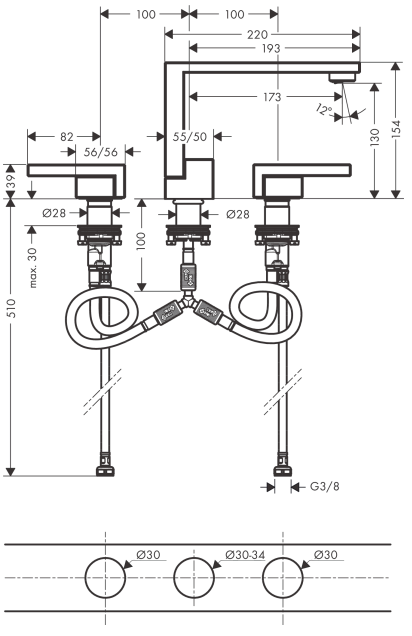
Scale drawing