measurements in millimetres (mm)
information updated August 2014

tel | 01322 422767
web | www.crosswater.co.uk
email | technical@crosswater-holdings.co.uk

crosswater
TECHNICAL

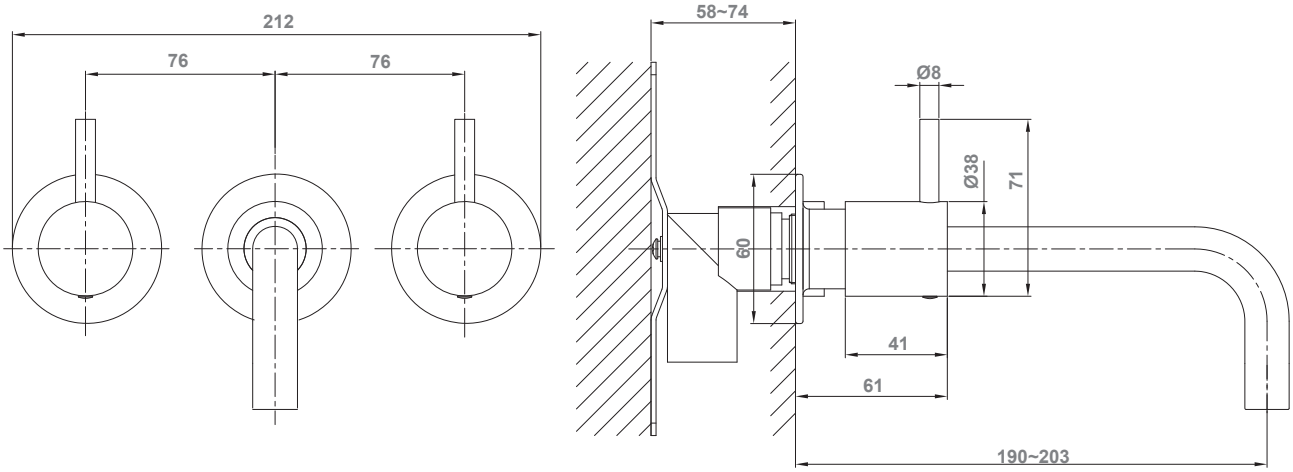

MIKE
PRO

Basin Three Hole Set With No Plate No Waste

wall Mounted

PRO130WN

Available in Chrome (C) Brushed Stainless Steel (V) or Brushed Chrome (J)