hansgrohe

Pulsify
Showerpipe 260 2jet EcoSmart with ShowerTablet Select 400
Surfaces: **Chrome** Article Number: **24241000**

Description

product features

- consists of: overhead shower, hand shower, shower thermostat, shower bar, shower hose
- overhead shower Pulsify 260 2jet
- shower head size overhead shower: 260 mm
- spray type overhead shower: PowderRain, Intense PowderRain
- ball-joint: overhead shower inclinable by 10-30°
- spray disc surface: graphite
- spray type hand shower: PowderRain, IntenseRain, Massage spray
- Fast Drain to reduce the dripping time
- removable shower head
- shelf made of plastic
- pipe can be shortened in height
- shower arm length overhead shower: 163 mm
- CoolContact thermostat: Prevents the housing from heating up, making showering even safer
- thermostat ShowerTablet Select 400
- simultaneous utilization of 3 functions
- mounting type: exposed installation
- centre distance 150 ± 12 mm
- Thermostat is delivered with buttons hand shower, PowderRain, Intense PowderRain
- Eco-Function: the volume control regulates up to 30% of the water flow

Technology

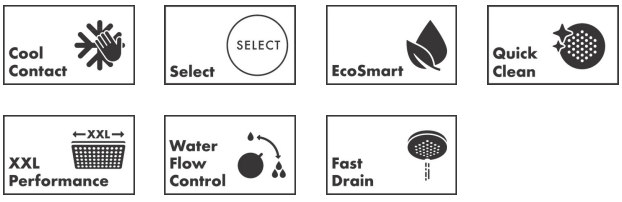

Design awards

DESIGN AWARD 2021

reddot winner 2021

Product image

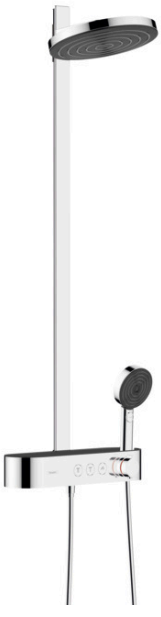
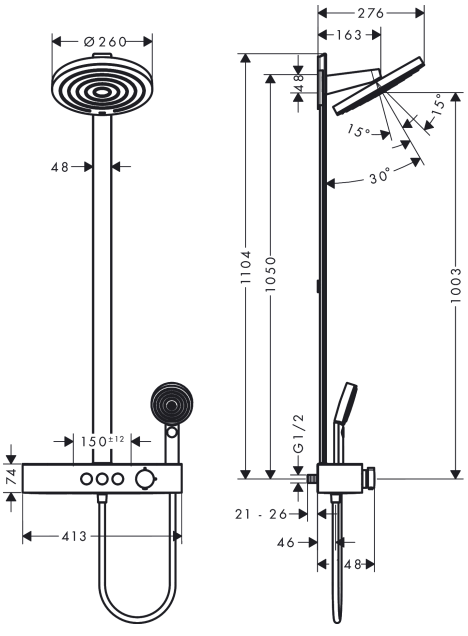
Scale drawing