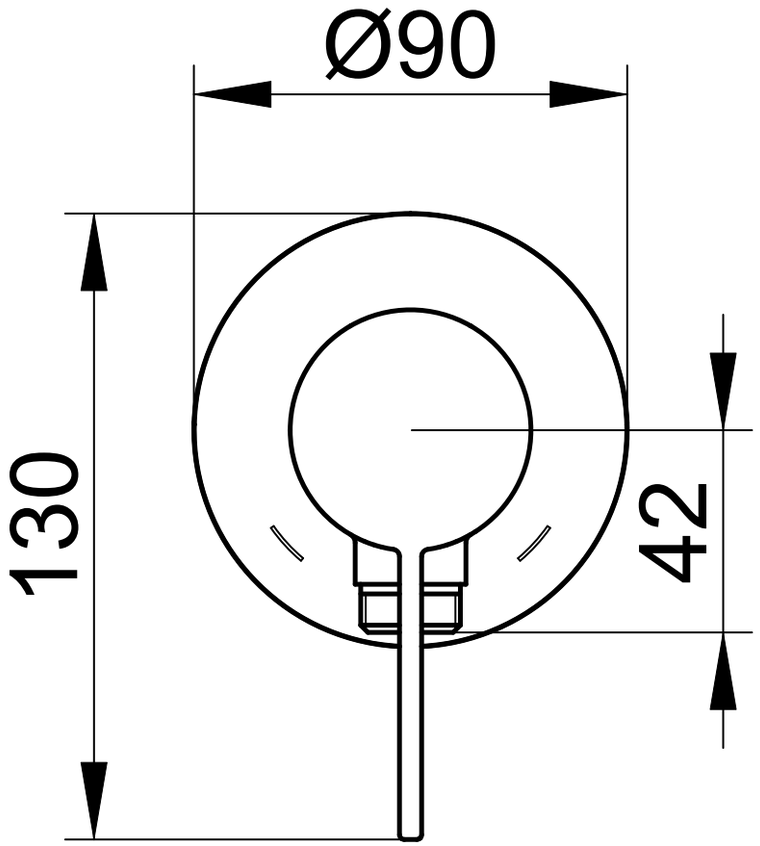
Ø90
130
42

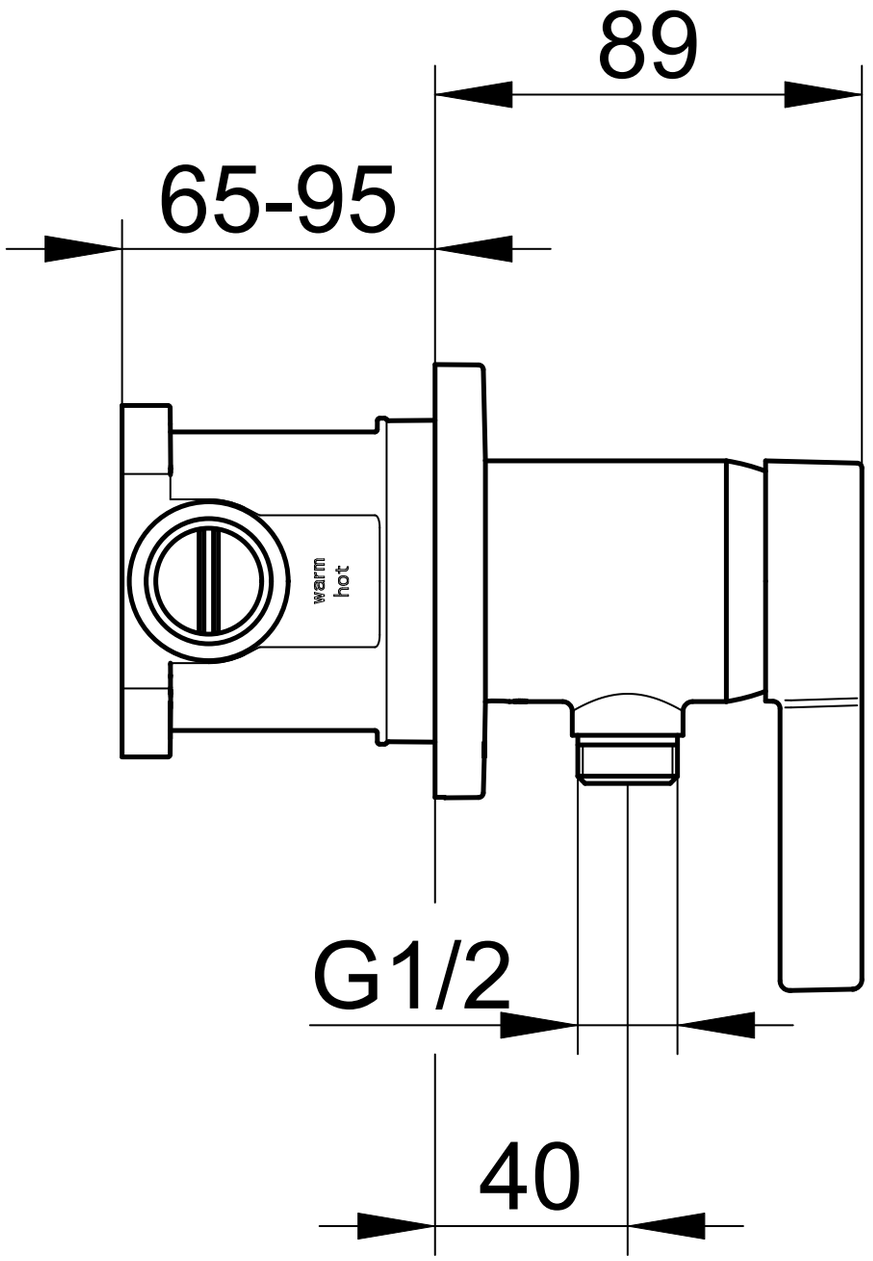
89
65-95
warm
hot
G1/2
40