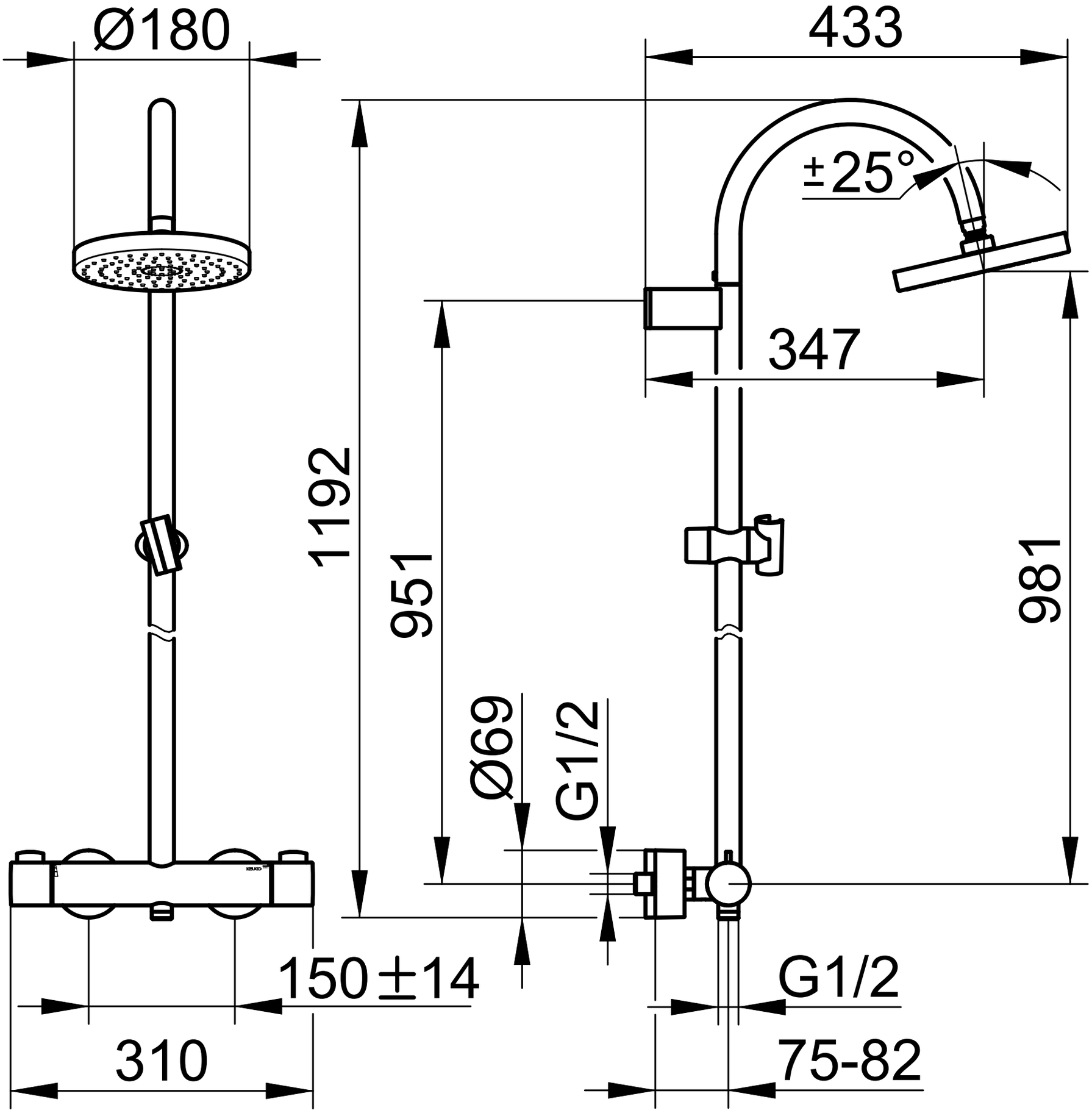
Ø180
433
±25°
347
1192
951
981
Ø69
G1/2
150±14
310
G1/2
75-82