crosswater

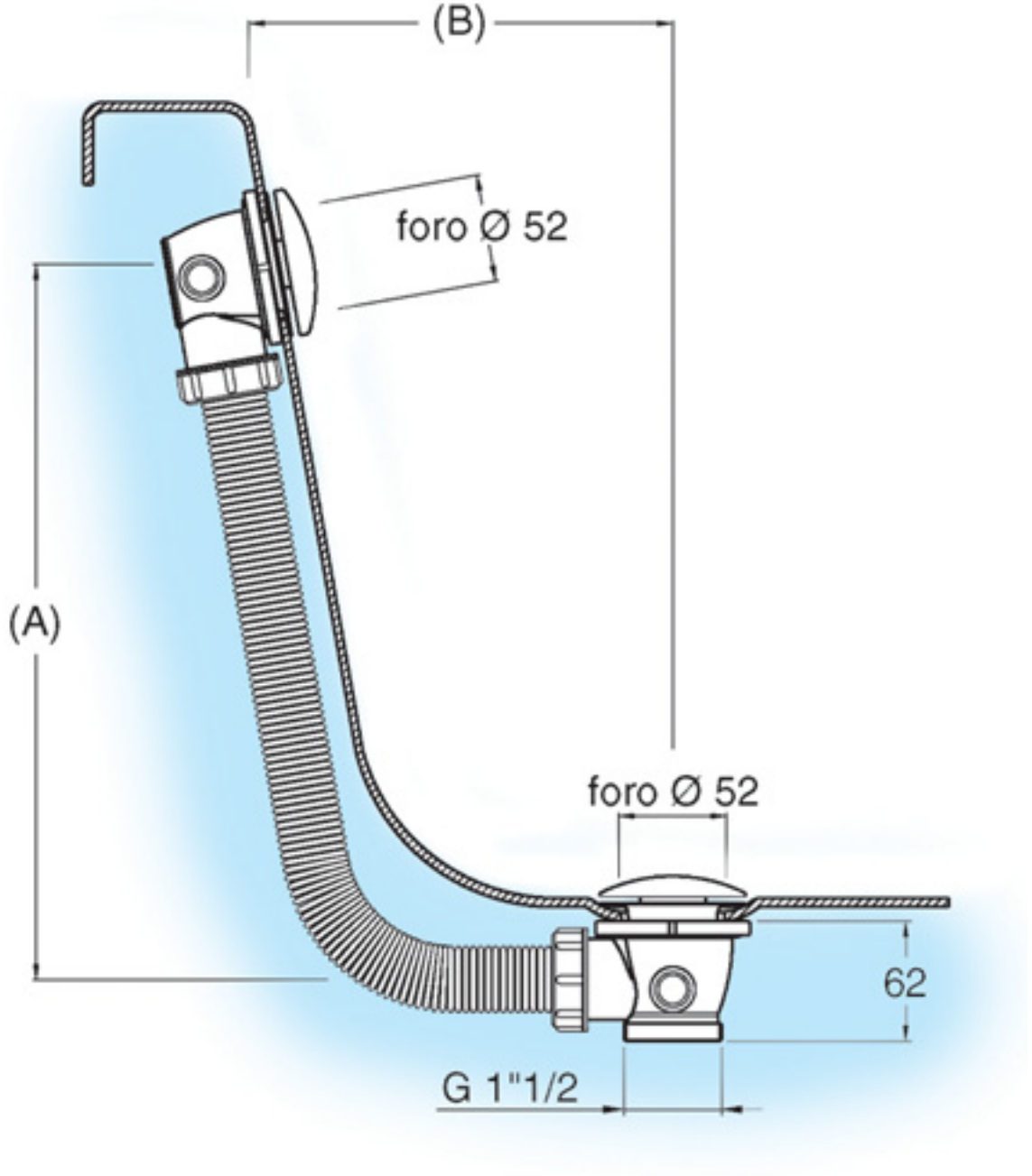

BTW0201C - BATH CLICK CLACK WASTE